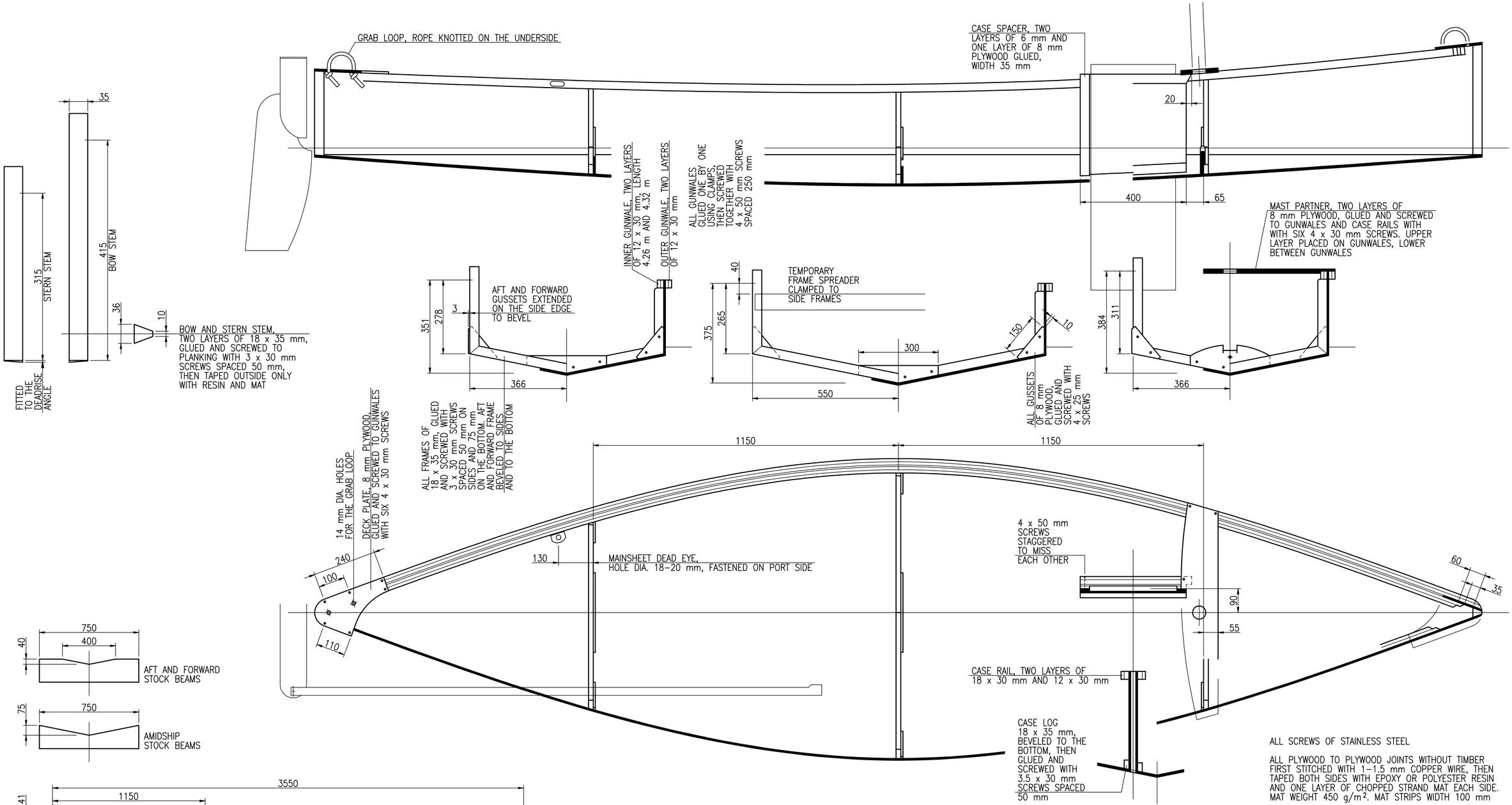

ALL SCREWS OF STAINLESS STEEL

ALL PLYWOOD TO PLYWOOD JOINTS WITHOUT TIMBER FIRST STITCHED WITH 1–1.5 mm COPPER WIRE, THEN TAPED BOTH SIDES WITH EPOXY OR POLYESTER RESIN AND ONE LAYER OF CHOPPED STRAND MAT EACH SIDE. MAT WEIGHT 450 g/m². MAT STRIPS WIDTH 100 mm

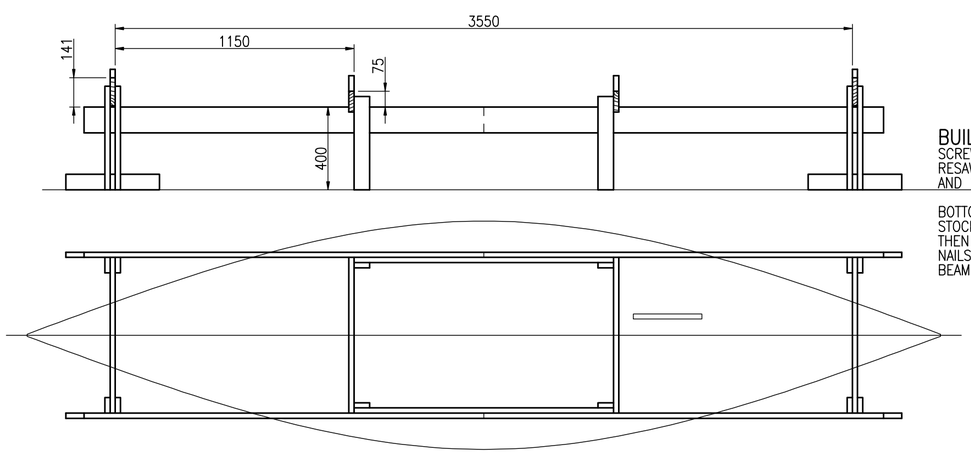

BUILDING STOCK

SCREWED OF 22 mm PARTICLEBOARD RESAWN INTO 75 mm, 125 mm AND 175 mm WIDE PANELS

BOTTOM PANEL SET UP ON THE BUILDING STOCK AND POSITIONED TO THE AMIDSHIP, THEN TEMPORARILY FASTENED WITH FOUR NAILS TO AFT AND FORWARD STOCK BEAMS

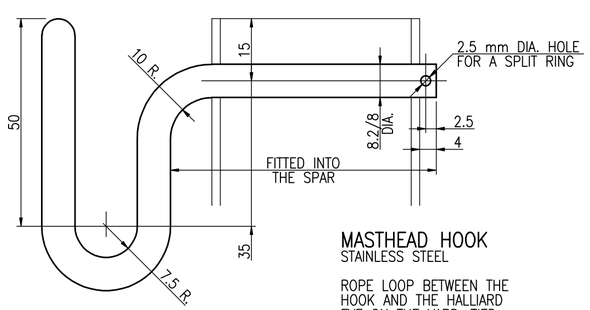

MASTHEAD HOOK

STAINLESS STEEL

ROPE LOOP BETWEEN THE HOOK AND THE HALLIARD EYE ON THE YARD, TIED TO THE EYE

4.4m

HULL CONSTRUCTION

SHEET 44.2/3, SIZE A2
SCALE 1:1, 1:5, 1:10, 1:20

RADOSŁAW WERSZKO
APRIL 2019, MARCH 2023

COPYRIGHT © RADOSŁAW WERSZKO. ALL RIGHTS RESERVED