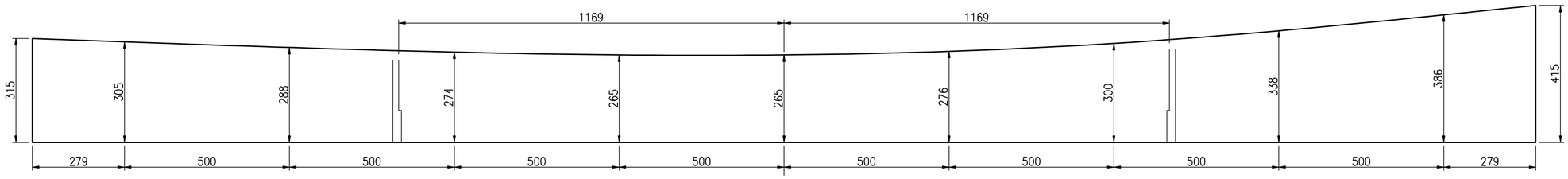

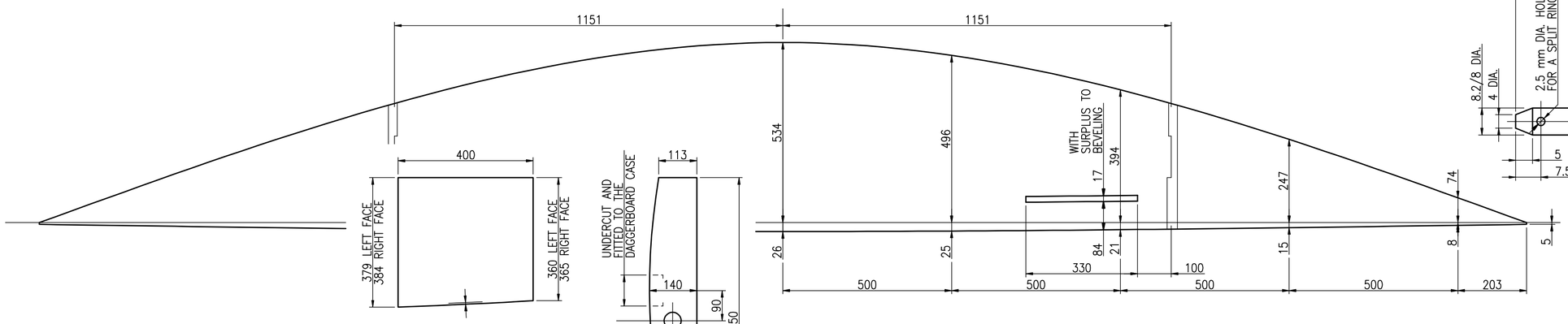

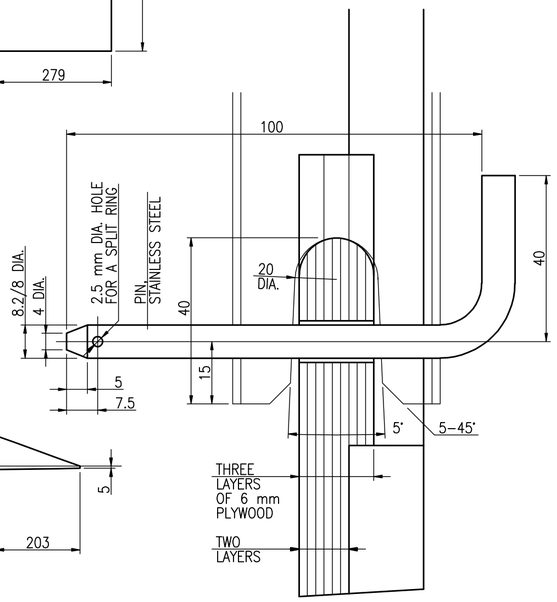

PANEL ARRANGEMENT

DRAWN FOR THE PLYWOOD SHEET
SIZE 1.22 x 2.44 m

PLYWOOD SHEETS JOINED WITH A SCARF JOINT
TEN TIMES AS LONG AS DEEP, THEN GLUED
APPLYING PRESSURE

ALL OTHER SMALL PANELS
CUT FROM SCRAPS

SIDE EDGES OF THE MAST PARTNER OVERSIZED
FOR MARKING ACCURATELY TO SHAPE

HOLE FOR THE MAST FITTED INTO THE SPAR
SECTION, 1 mm GAP ALL AROUND, CUT OUT
AFTER SETTING THE MAST PARTNER UP

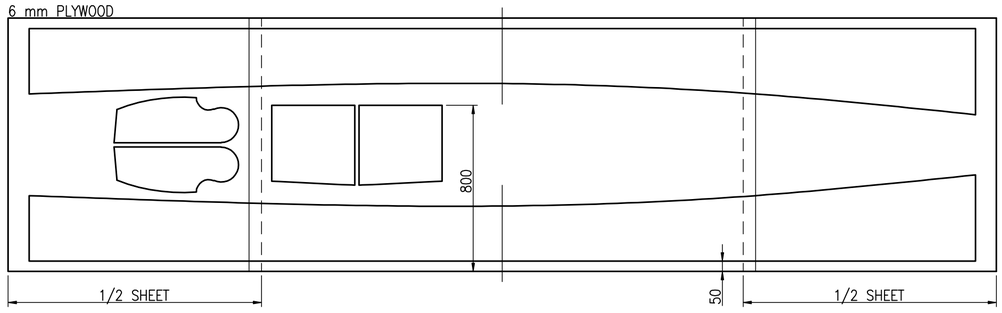

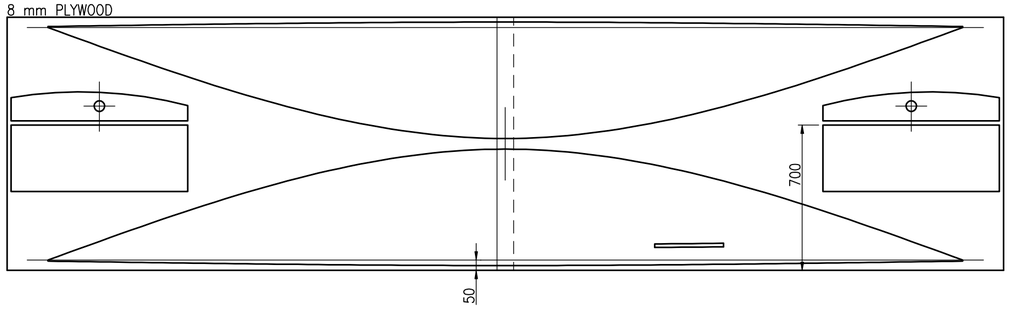

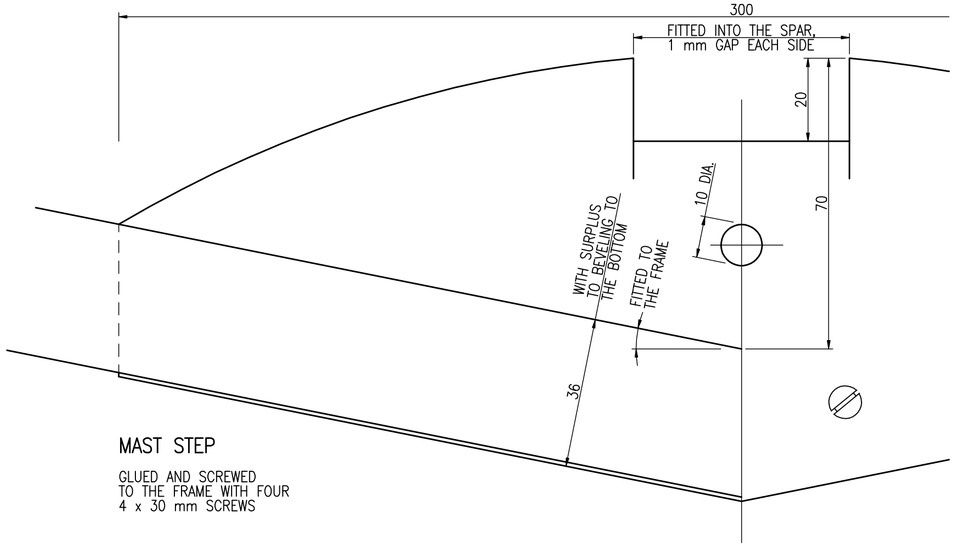

MAST STEP

GLUED AND SCREWED
TO THE FRAME WITH FOUR
4 x 30 mm SCREWS

MAIN DIMENSIONS

LENGTH OVERALL	L_{OA}	4.40 m
LENGTH OF WATERLINE	L_{WL}	4.40 m
BEAM	B	1.10 m
BEAM OF WATERLINE	B_{WL}	1.10 m
DRAFT	T_C	0.135 m
DRAFT DAGGERBOARD DOWN	T	0.535 m
FREEBOARD AFT	F_A	0.29 m
FREEBOARD FORWARD	F_F	0.39 m
VOLUME DISPLACEMENT	∇	0.21 m^3

4.4m

HULL PANELS, MAST STEP

SHEET 44.1/3, SIZE A2
SCALE 1:1, 1:10, 1:20

RADOSŁAW WERSZKO
APRIL 2019

COPYRIGHT © RADOSŁAW WERSZKO. ALL RIGHTS RESERVED